GORILLA SPORTS

Professional Multi Bench(10000834)

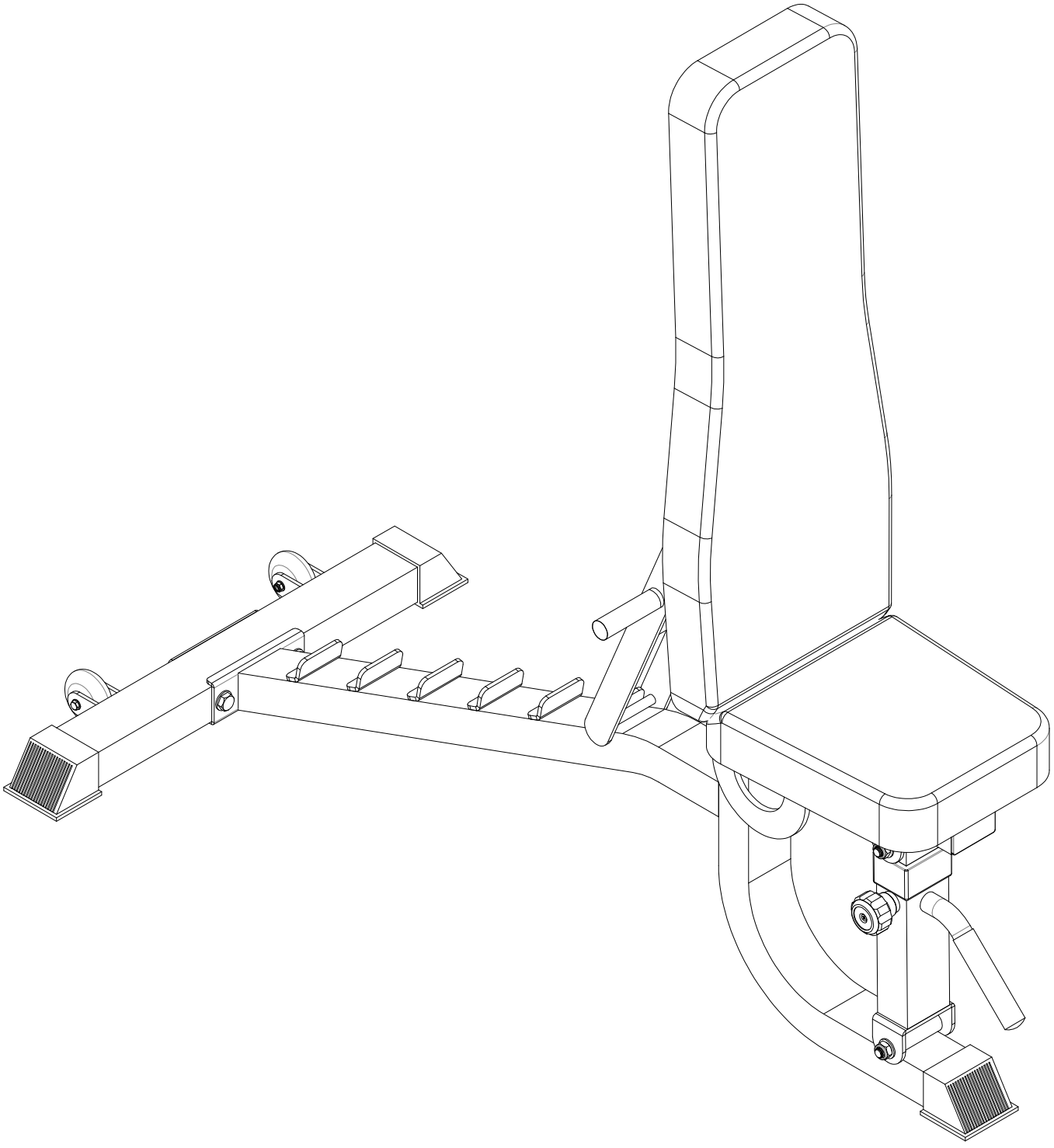

GORILLA SPORTS

Washer:(Φ8)

7X

Washer:(Φ12)

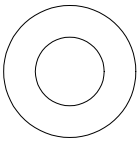

12X

Lock Nut:(M12)

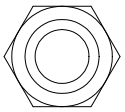

6X

Hex Bolt:(M12*105)

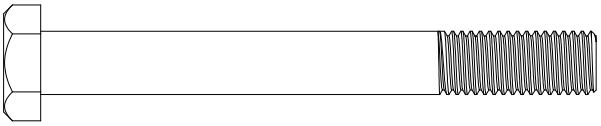

2X

Hex Bolt:(M12*95)

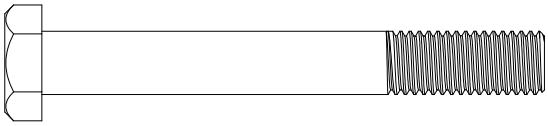

2X

Hex Bolt:(M12*115)

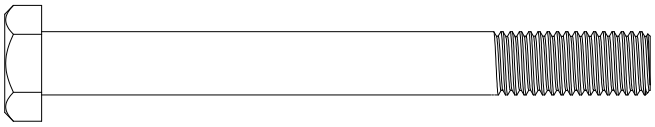

1X

Hex Bolt:(M8*65)

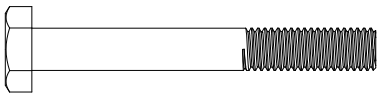

1X

Hex Bolt:(M12*130)

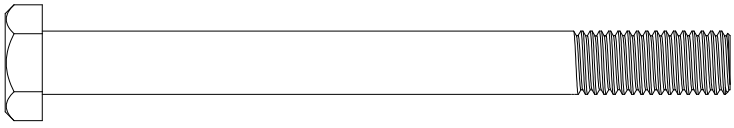

1X

Hex Bolt:(M8*25)

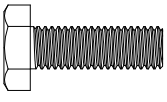

6X

GORILLA SPORTS

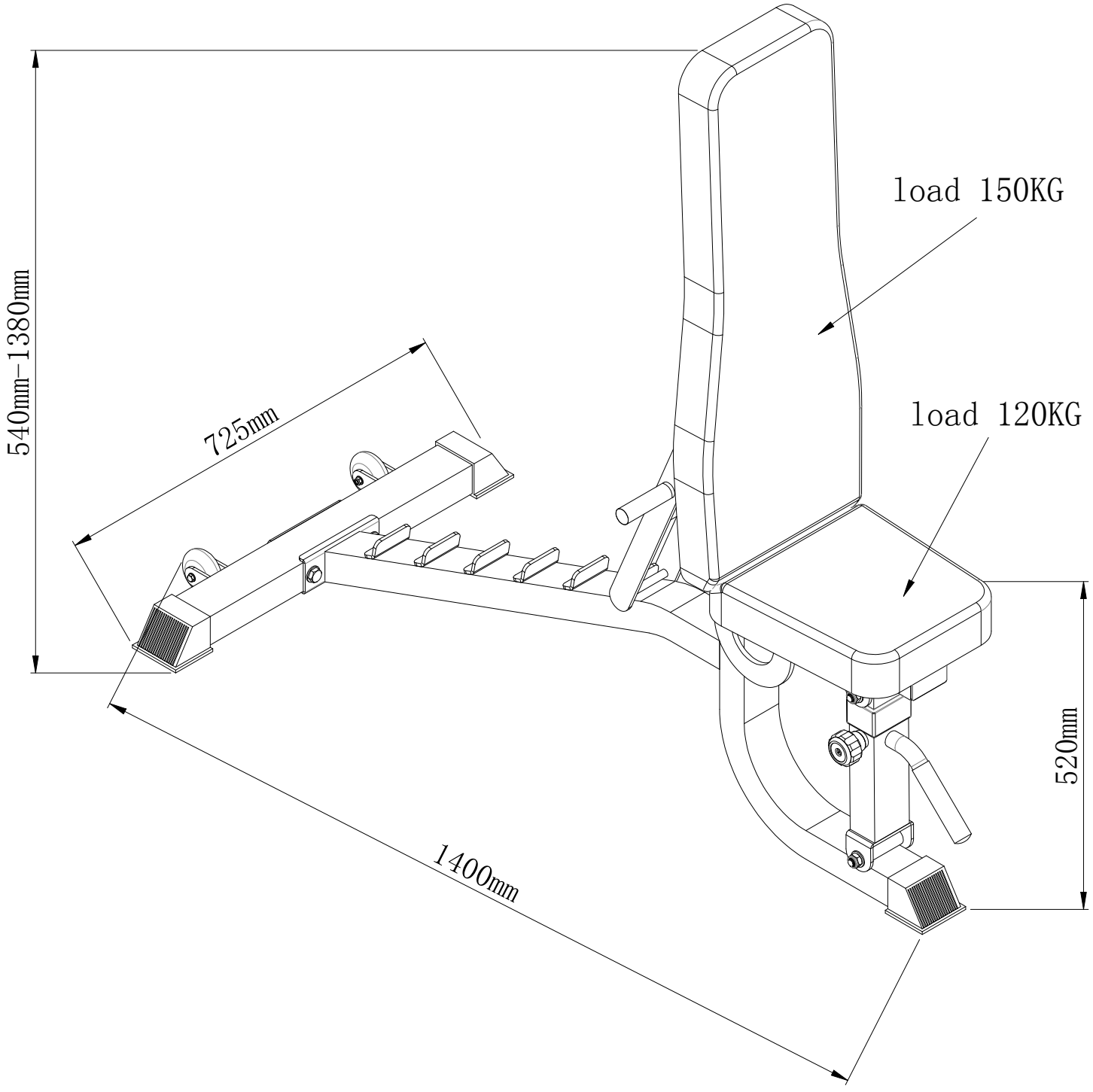

1

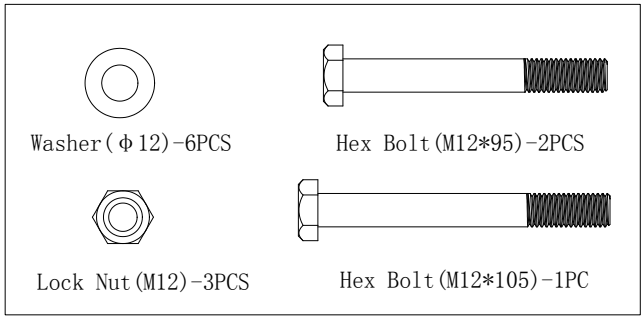
Washer(Φ12)-6PCS
Hex Bolt(M12*95)-2PCS
Lock Nut(M12)-3PCS
Hex Bolt(M12*105)-1PC

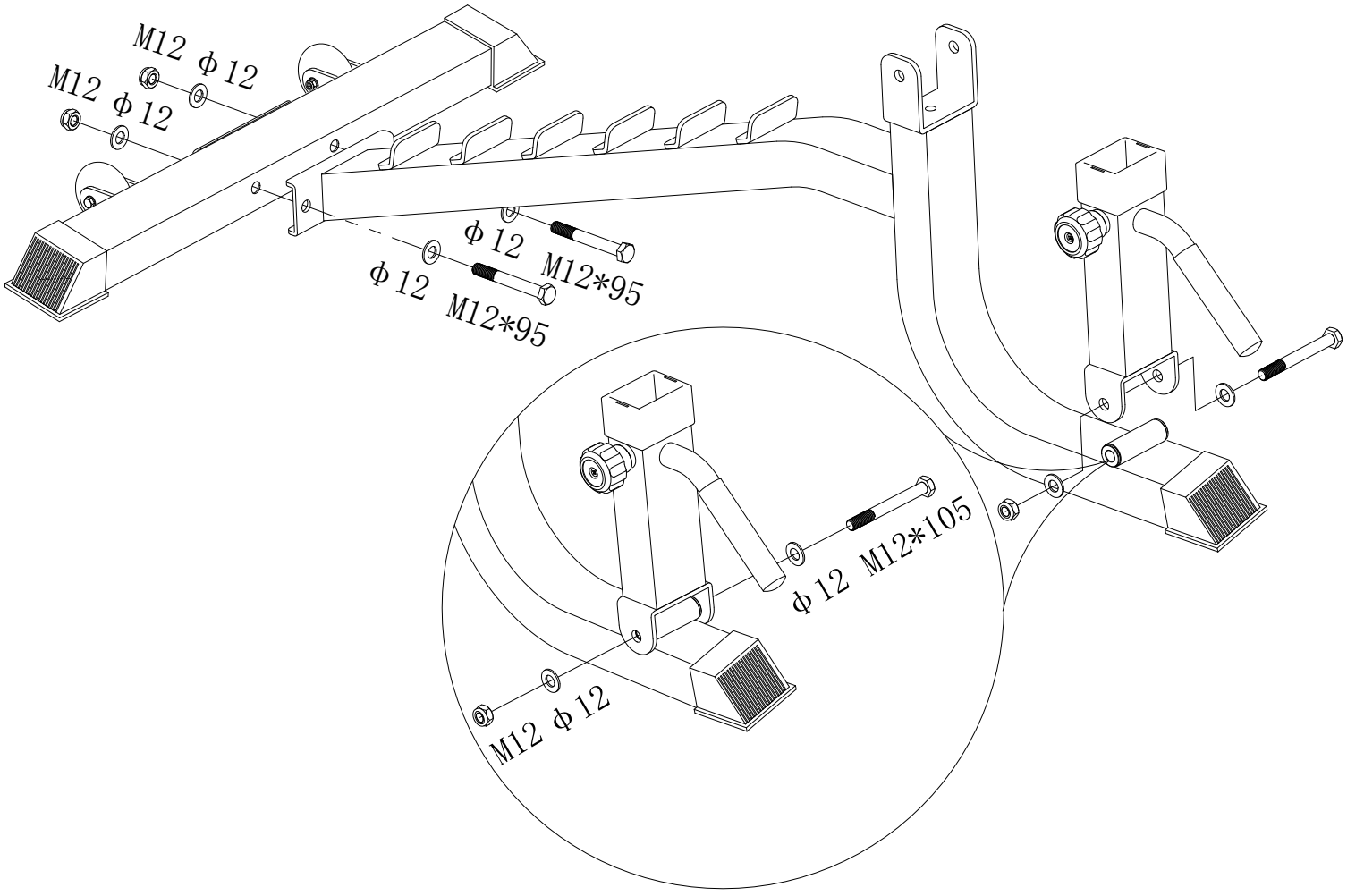
M12 Φ12
M12 Φ12
Φ12 M12*95
Φ12 M12*95
Φ12 M12*105
M12 Φ12

2

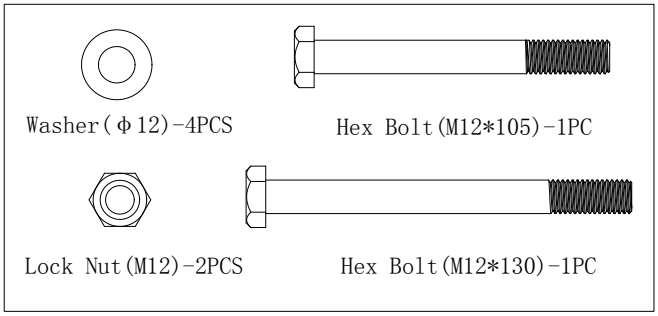
Washer(φ12)-4PCS
Hex Bolt(M12*105)-1PC
Lock Nut(M12)-2PCS
Hex Bolt(M12*130)-1PC

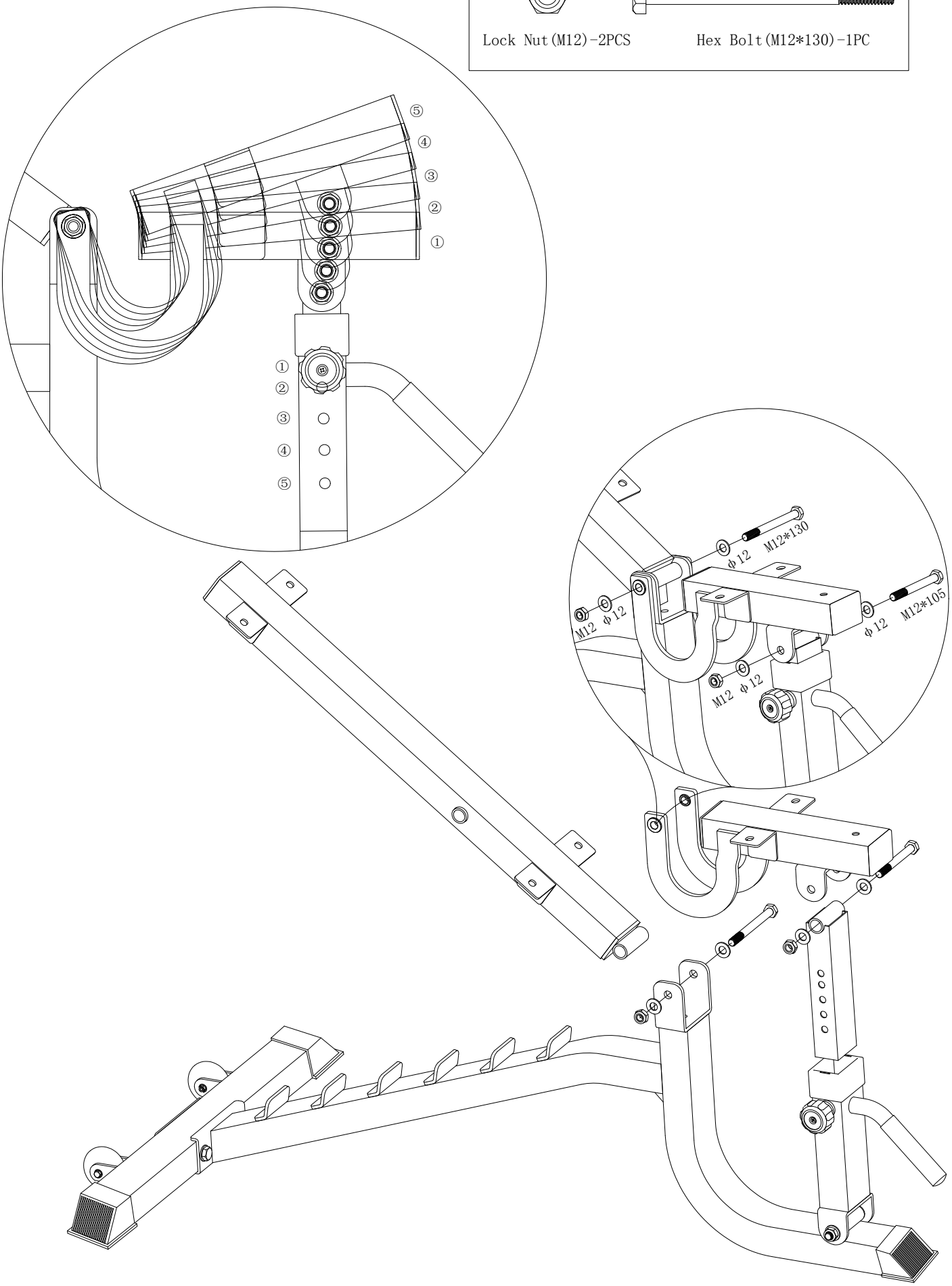
⑤
④
③
②
①
①
②
③
④
⑤
φ12 M12*130
M12 φ12
φ12 M12*105
M12 φ12

3

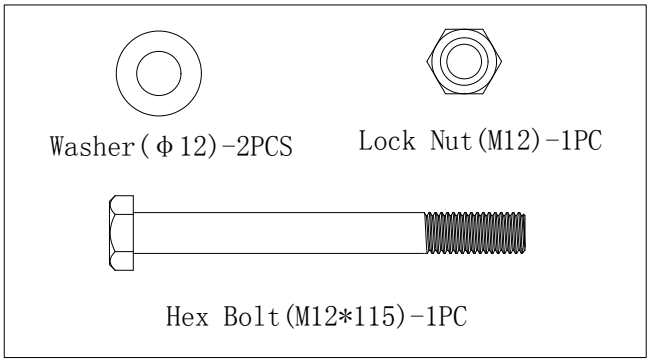
Washer(φ12)-2PCS
Lock Nut(M12)-1PC
Hex Bolt(M12*115)-1PC

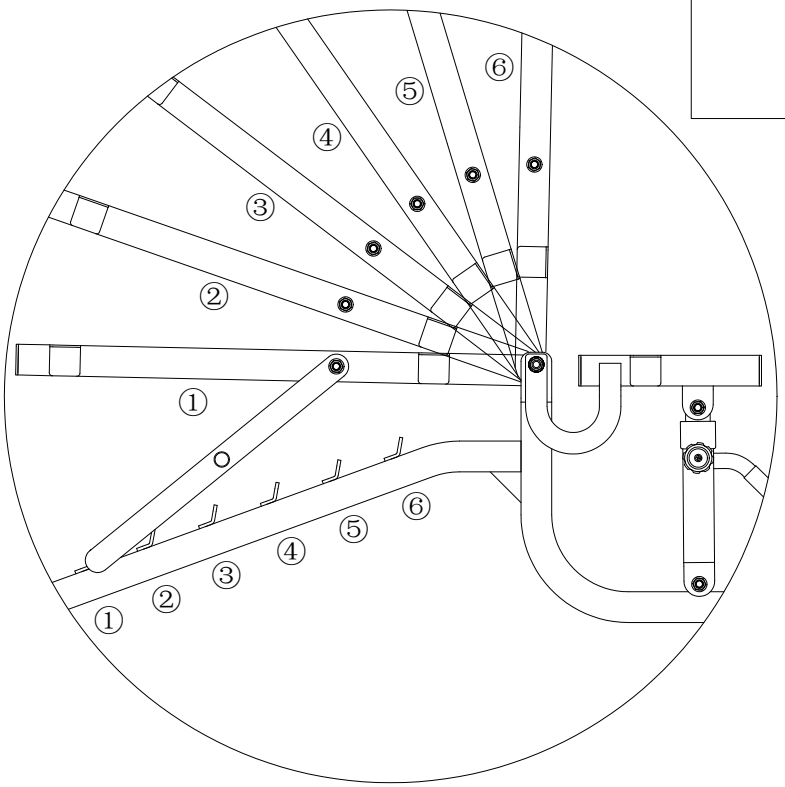
⑥
⑤
④
③
②
①
①
②
③
④
⑤
⑥

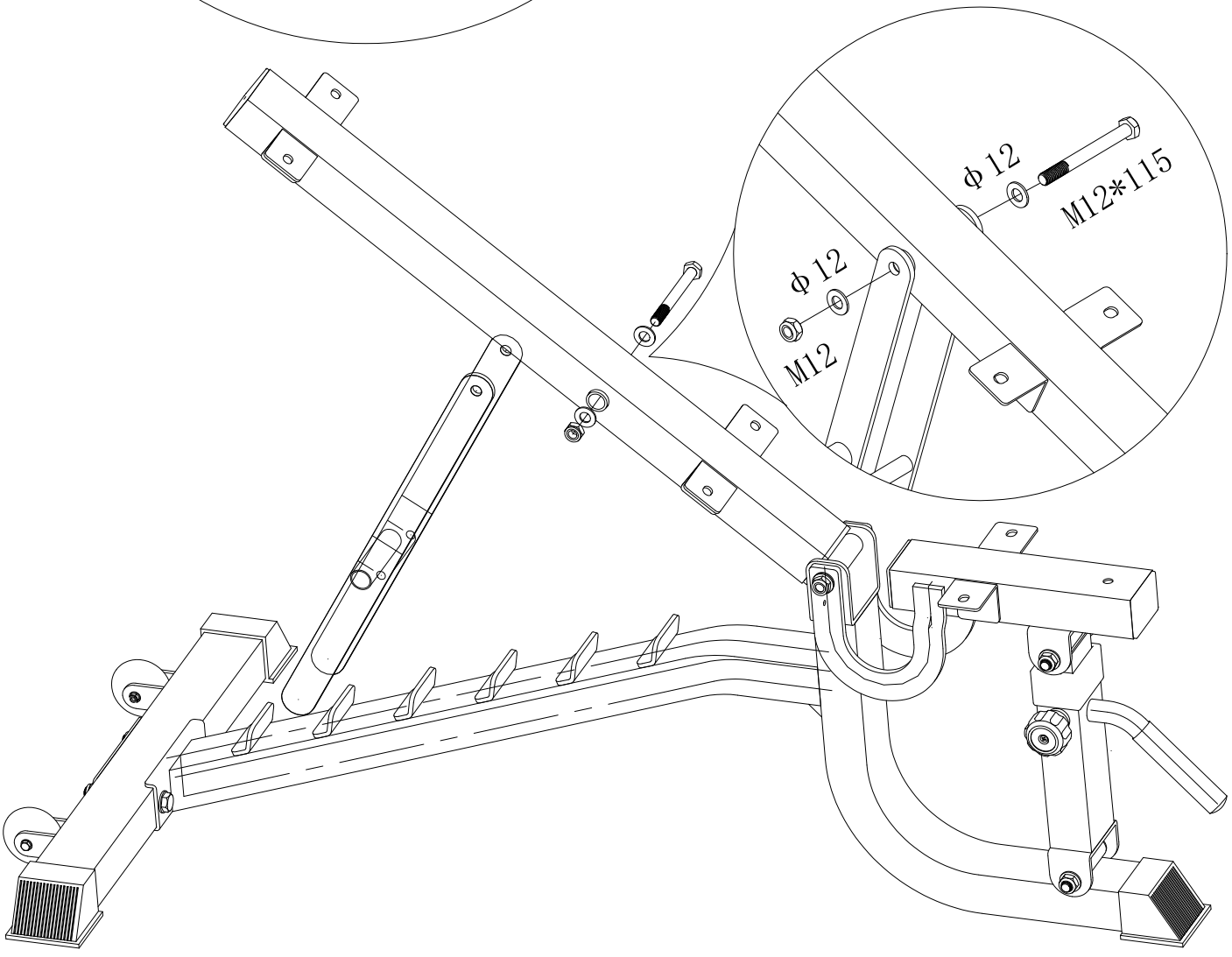
φ12
M12*115
φ12
M12

4

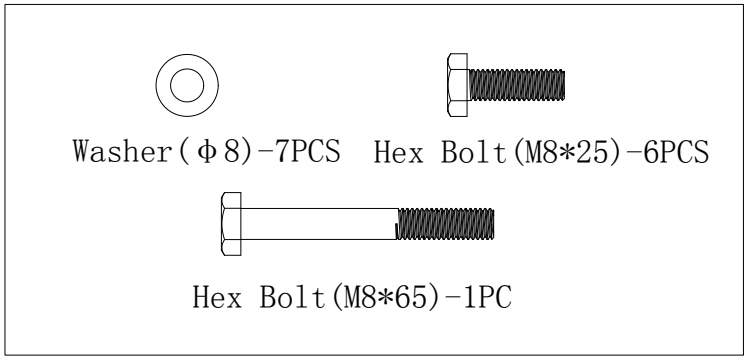
Washer(Φ8)-7PCS
Hex Bolt(M8*25)-6PCS
Hex Bolt(M8*65)-1PC

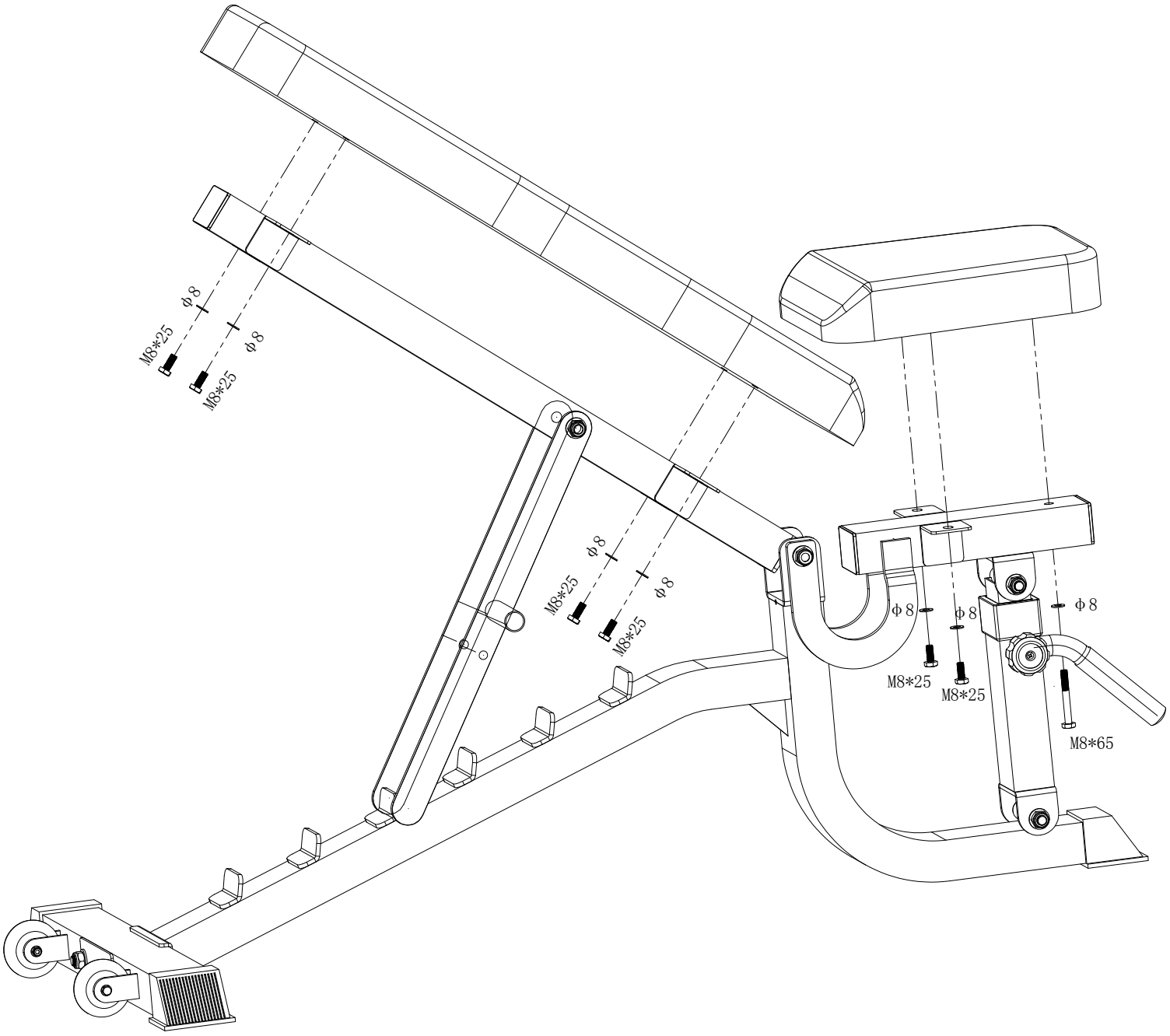
Φ8
M8*25
Φ8
M8*25
Φ8
M8*25
Φ8
M8*25
Φ8
Φ8
M8*25
M8*25
Φ8
M8*65